REV	DESCRIPTION	BY	CHK	DATE	ECN
D	SEE SHEET 1 FOR REVISION				

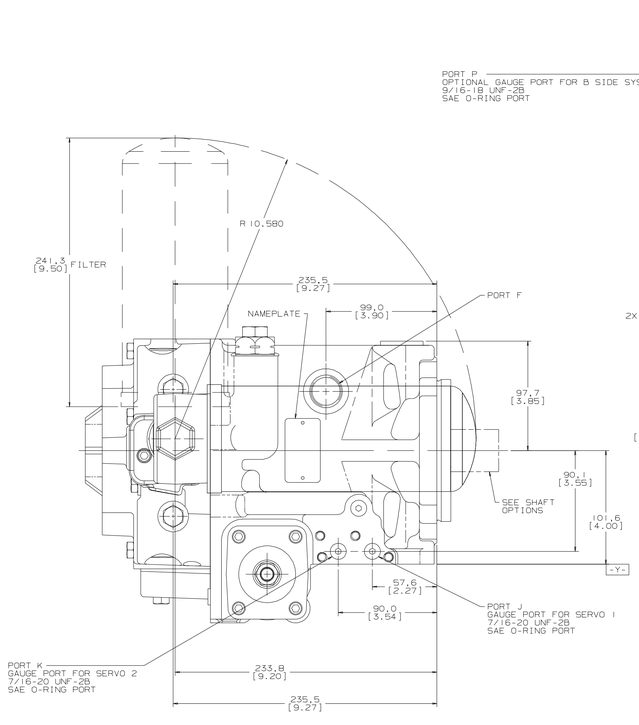

VIEW A-A

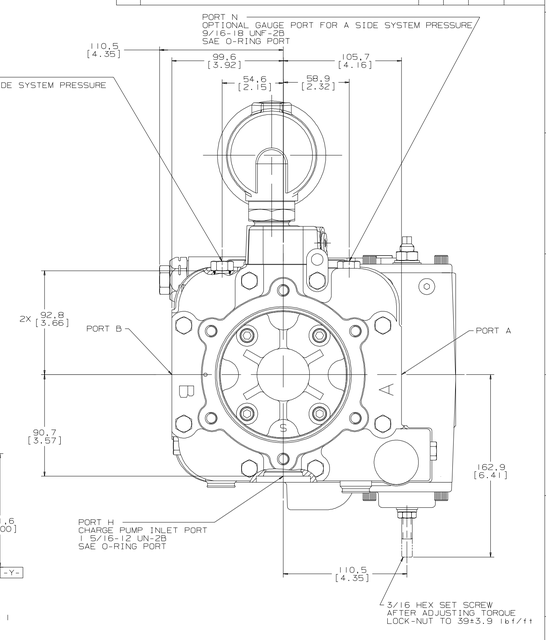

VIEW B-B

REVIEWED FOR CLASSIFICATION PER ESP-042

UNLESS OTHERWISE SPECIFIED THE DIMENSIONS ARE IN INCHES ☐ MILLIMETERS ☒	DRAWING BASED ON ANSI Y14.5M-1982	Danfoss
TOLERANCES .X ± --- .XX ± --- .XXX ± --- ∠ ± ---	THE REPRODUCTION, DISTRIBUTION, AND UTILIZATION OF THIS DOCUMENT AND THE COMMUNICATION OF ITS CONTENTS TO OTHERS WITHOUT EXPLICIT AUTHORIZATION IS PROHIBITED. OFFENDERS WILL BE HELD LIABLE FOR THE PAYMENT OF DAMAGES. ALL RIGHTS RESERVED IN THE EVENT OF THE GRANT OF A PATENT, UTILITY MODEL, OR DESIGN. (PER ISO 16016)	
UNSPECIFIED RADII ARE ---	DRAWN BY: BMS 12-6-01 / ENGINEER: RLL 12-18-01	TITLE 54, 64, 75 CC SERIES 2 VARIABLE PUMP INSTALLATION, HIGH TORQUE, PSF, ONE SIDE ADJ SERVO STOP
UNSPECIFIED DRAFT ANGLES ARE ---	METALLURGY: --- BY/DATE: / ENGR: BY/DATE: JMR 12-18-01	
	THIRD ANGLE PROJECTION	WORKCHECK (WORKORDER) ☐ / WORKCHECK (WORKORDER) ☐ / NUMBER A-991-033
DRAWING FORMAT: CAD ☒ MANUAL ☐	DO NOT SCALE / ARITHMETICAL AVERAGE	SCALE 1/1 / SHEET 2 OF 2

REV	DESCRIPTION	BY	CHK	DATE	ECN
A	RELEASE FOR SAMPLES AND ESTIMATE	BMS	RLL	11-26-01	M26742
B	SHT 1(4B)REVISED MATING CONNECTOR CALL-OUT	JMS	JMS	9-30-03	44352
C	INACTIVE	BMS	RLL	9-26-03	X45846
D	ENGINEERING RELEASE	BMS	BMS	11-11-04	49878

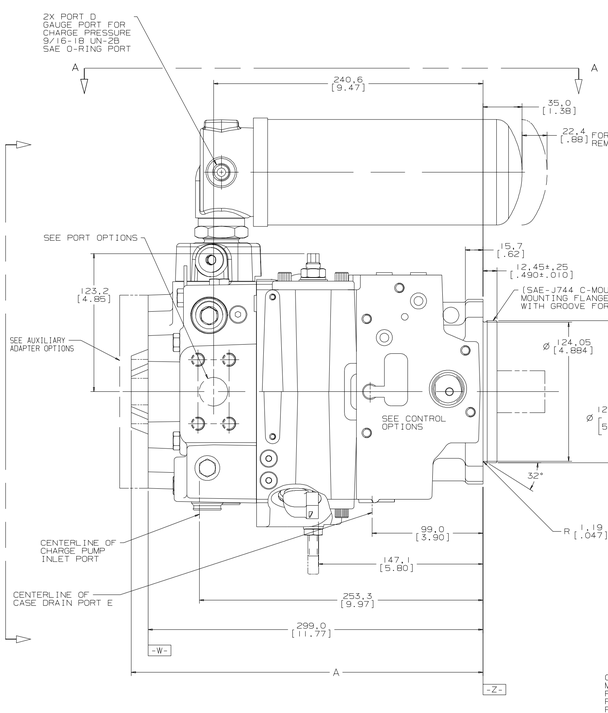

CHARGE PUMP DISPLACEMENT	DIM A
13,9 cm3/r [.85 in3/r]	309,9 [12.20]
17,4 cm3/r [1.06 in3/r]	313,4 [12.34]
21,0 cm3/r [1.28 in3/r]	317,0 [12.48]
27,9 cm3/r [1.70 in3/r]	323,8 [12.75]

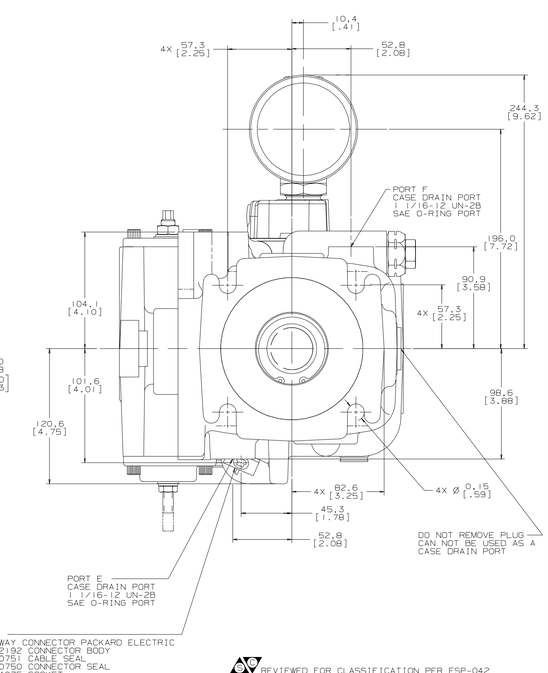

OPTIONAL:
MATING 2 WAY CONNECTOR PACKARD ELECTRIC
P/N 1216 2192 CONNECTOR BODY
P/N 1204 0751 CABLE SEAL
P/N 1204 0750 CONNECTOR SEAL
P/N 1212 4075 SOCKET

NOTE

1 FOR ADDITIONAL INFORMATION ON INSTALLATION, START-UP PROCEDURES, AND RECOMMENDED FLUIDS, CONTACT YOUR EATON REPRESENTATIVE

2 ALL PORTS SEALED FOR SHIPPING

3 UNLESS OTHERWISE SPECIFIED ALL DIMENSIONS ARE NOMINAL

4 UNIT SHAFT ROTATION SPECIFIED IS VIEWED FROM INPUT SHAFT END

REVIEWED FOR CLASSIFICATION PER ESP-042

UNLESS OTHERWISE SPECIFIED THE DIMENSIONS ARE IN INCHES ☐ MILLIMETERS ☒	DRAWING BASED ON ANSI Y14.5M-1982	Danfoss
TOLERANCES .X ± --- .XX ± --- .XXX ± --- ∠ ± ---	THE REPRODUCTION, DISTRIBUTION, AND UTILIZATION OF THIS DOCUMENT AND THE COMMUNICATION OF ITS CONTENTS TO OTHERS WITHOUT EXPLICIT AUTHORIZATION IS PROHIBITED. OFFENDERS WILL BE HELD LIABLE FOR THE PAYMENT OF DAMAGES. ALL RIGHTS RESERVED IN THE EVENT OF THE GRANT OF A PATENT, UTILITY MODEL, OR DESIGN. (PER ISO 16016)	
UNSPECIFIED RADII ARE ---	DRAWN BY: BMS 12-6-01 / ENGINEER: RLL 12-18-01	TITLE 54, 64, 75 CC SERIES 2 VARIABLE PUMP INSTALLATION, HIGH TORQUE, PSF, ONE SIDE ADJ SERVO STOP
UNSPECIFIED DRAFT ANGLES ARE ---	METALLURGY: --- BY/DATE: / ENGR: BY/DATE: JMR 12-18-01	
	THIRD ANGLE PROJECTION	WORKCHECK (WORKORDER) ☐ / WORKCHECK (WORKORDER) ☐ / NUMBER A-991-033
DRAWING FORMAT: CAD ☒ MANUAL ☐	DO NOT SCALE / ARITHMETICAL AVERAGE	SCALE 1/1 / SHEET 1 OF 2